(12) INTERNATIONAL APPLICATION PUBLISHED UNDER THE PATENT COOPERATION TREATY (PCT)

(19) World Intellectual Property Organization
International Bureau

(43) International Publication Date
16 July 2026 (16.07.2026)

WIPO | PCT

(10) International Publication Number
WO 2026/149902 A1

(51) International Patent Classification:
F04D 29/02 (2006.01) *F04D 13/06* (2006.01)
F04D 29/22 (2006.01)

(21) International Application Number:
PCT/EP2026/050115

(22) International Filing Date:
06 January 2026 (06.01.2026)

(25) Filing Language: English

(26) Publication Language: English

(30) Priority Data:
PA202530021 13 January 2025 (13.01.2025) DK

(71) Applicant: **ASETEK DANMARK A/S** [DK/DK]; Skjoldet 20, 9230 Svenstrup J (DK).

(72) Inventors: **PEDERSEN, Kenneth Nørgaard**; Skjoldet 20, 9230 Svenstrup J (DK). **SØRENSEN, Michael Holme**; Skjoldet 20, 9230 Svenstrup J (DK).

(74) Agent: **PATRADE A/S**; Ceresbyen 75, 8000 Aarhus C (DK).

(81) Designated States *(unless otherwise indicated, for every kind of national protection available)*: AE, AG, AL, AM, AO, AT, AU, AZ, BA, BB, BG, BH, BN, BR, BW, BY, BZ, CA, CH, CL, CN, CO, CR, CU, CV, CZ, DE, DJ, DK, DM, DO, DZ, EC, EE, EG, ES, FI, GB, GD, GE, GH, GM, GT, HN, HR, HU, ID, IL, IN, IQ, IR, IS, IT, JM, JO, JP, KE, KG, KH, KN, KP, KR, KW, KZ, LA, LC, LK, LR, LS, LU, LY, MA, MD, MG, MK, MN, MU, MW, MX, MY, MZ, NA, NG, NI, NO, NZ, OM, PA, PE, PG, PH, PL, PT, QA, RO, RS, RU, RW, SA, SC, SD, SE, SG, SK, SL, ST, SV, SY, TH, TJ, TM, TN, TR, TT, TZ, UA, UG, US, UY, UZ, VC, VN, WS, ZA, ZM, ZW.

(84) Designated States *(unless otherwise indicated, for every kind of regional protection available)*: ARIPO (BW, CV, GH, GM, KE, LR, LS, MU, MW, MZ, NA, RW, SC, SD, SL, ST, SZ, TZ, UG, ZM, ZW), Eurasian (AM, AZ, BY, KG, KZ, RU, TJ, TM), European (AL, AT, BE, BG, CH, CY, CZ, DE, DK, EE, ES, FI, FR, GB, GR, HR, HU, IE, IS, IT, LT, LU, LV, MC, ME, MK, MT, NL, NO, PL, PT, RO, RS, SE, SI, SK, SM, TR), OAPI (BF, BJ, CF, CG, CI, CM, GA, GN, GQ, GW, KM, ML, MR, NE, SN, TD, TG).

Declarations under Rule 4.17:
— *as to the identity of the inventor (Rule 4.17(i))*
— *as to applicant's entitlement to apply for and be granted a patent (Rule 4.17(ii))*
— *of inventorship (Rule 4.17(iv))*

Published:
— *with international search report (Art. 21(3))*
— *in black and white; the international application as filed contained color or greyscale and is available for download from PATENTSCOPE*

(54) Title: LIQUID PUMP ROTOR WITH INTEGRATED BLADES, BEARING AND MAGNET, LIQUID COOLING SYSTEM, AND METHOD FOR FABRICATION OF A ROTOR

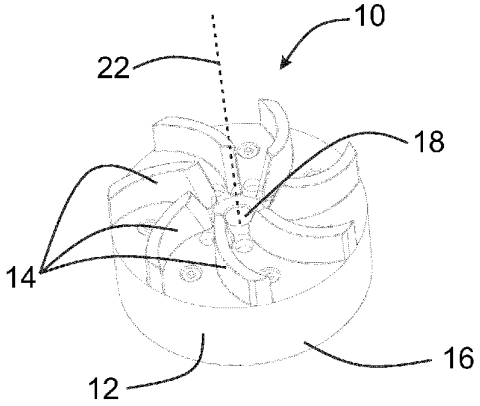

Fig. 8

(57) Abstract: A rotor for a liquid pump comprising a rotor body formed by a cylinder. The cylinder having a first end and a second end. The rotor further comprises a bearing for aligning the rotor with a rotational axis. The bearing comprising a bearing cavity for receiving a shaft. The rotor further comprises a plurality of rotor blades protruding from the rotor body. The rotor further comprises a plurality of magnetic poles being distributed within the rotor body with rotational symmetry about the rotational axis. The rotor body, the bearing, the rotor blades, and the magnetic poles are made of the same composite material. The composite comprising magnetic particles substantially evenly distributed throughout a matrix material.

WO 2026/149902 A1

Liquid pump rotor with integrated blades, bearing and magnet, liquid cooling system, and method for fabrication of a rotor

Field of the invention

The invention relates to the field of liquid pumps, more specifically liquid cooling pumps.

Background

Liquid cooling pumps are a critical component in thermal management systems, as they circulate coolant fluid to dissipate heat generated by engines, industrial machinery, or electronic devices. At the heart of these pumps is the rotor, which imparts kinetic energy to the coolant. The efficiency and durability of the pump depend heavily on the design, material, and manufacturing process of the rotor.

Traditional rotors are often manufactured using multi-step processes involving metal machining, casting, and/or moulding. These methods, while effective, introduce several challenges in terms of cost, production time, and material waste. Precision machining of metal rotors, for instance, requires specialized equipment and skilled labour, leading to high production costs. Casting and moulding methods, while potentially less labour-intensive, may face issues of alignment of bearings and magnets. These issues necessitate additional processing, further increasing production costs and time.

There is a pressing need for innovations that reduce the production costs of rotors for liquid cooling pumps while ensuring high efficiency, durability, and reliability. The ideal solution should involve cost-effective materials, simplified production processes, and designs that maximize fluid flow while minimizing energy loss.

Examples of a liquid pumps comprising a rotor are disclosed in CN208503041U and CN220556794U, which are incorporated in the present disclosure by reference.

US2012/0195754 relates to an implementation of a fluid pump, particularly a water pump, wherein an impeller comprising a plain bearing bush is rotatably supported on a bearing pin. The impeller and the plain bearing bush are thereby made of an identical base material in one or more pieces. A further material is mixed into the base material

of the plain bearing bush, improving the sliding properties of the plain bearing bush on the bearing pin.

A summary of the invention

According to a first aspect of the present invention is disclosed a rotor for a liquid pump, the rotor comprising a rotor body, a bearing, a plurality of rotor blades protruding from the rotor body, a plurality of magnetic poles being distributed within the rotor body with rotational symmetry about the rotational axis. The rotor body is formed by a cylinder, the cylinder having a first end and a second end. The bearing is for aligning the rotor with a rotational axis, the bearing comprising a bearing cavity for receiving a shaft. The rotor body, the bearing, the rotor blades, and the magnetic poles are made of the same composite material, the composite material comprising magnetic particles substantially evenly distributed throughout a matrix material.

The rotor body provides a structure mechanically connecting and/or containing other features of the rotor. When the magnetic poles are described as being distributed within the rotor body it means that the rotor body comprises the magnetic poles. At least a subset of the magnetic particles which are distributed throughout the matrix material are magnetized to form the magnetic poles as an integrated part of the rotor. By the body being a cylinder must be understood that it can be a cylinder of any shape including a disc. The cylinder may be solid or at least partially hollow and/or may comprise mesh structures. The first and second ends of the cylinder may be open or closed. The closing of the closed end may be by an integrated plate or a solid segment of the cylinder. A closed end may comprise one or more through-going holes and/or meshing. For a cylindrical rotor body having a closed end and an open end the accumulated open area of the closed end is smaller than at the open area of the open end. The bearing cavity may be throughgoing hole or it may be an indent such as a blind hole or a half-sphere.

In a preferred variant the rotor is made by casting a single piece of material requiring no subsequent assembly.

A rotor according to the first aspect of the invention may be used with liquid pumps for liquid cooling systems and may provide an efficient pump as the magnetic poles of the magnetic material of the rotor may be stronger than solutions known in the art where magnets are attached to the rotor body when the rotor body would not comprise

magnetic material. In the present invention all of the material of the rotor body aligned with the coils of the pump may be magnetized to contribute to producing a magnetic field that can be utilized in the motor. Thus, a liquid pump may be able to provide a higher throughput of liquid when using a rotor according to the first aspect of the invention where magnetic poles are integrated into the rotor body.

The rotor provides for a compact liquid pump design as the rotor may be smaller compared to a rotor with the same efficiency known in the art comprising multiple pieces.

If the rotor is a hollow cylinder the coils of the motor may be placed inside the hollow part which results in an even more compact solution.

The rotor is simple and cost effective to produce as it may be produced by injection moulding of a single piece.

In some variants, the rotor body is a solid disc. There may be a cavity for the bearing.

Having the rotor be a solid disc provides the opportunity to increase the strength of the magnetic poles.

In some variants, the rotor body is a hollow cylinder with an end plate. The bearing may be part of the end plate. There may be holes in the end plate.

Holes of the end plate may enable liquid to enter the free space around the rotor, such that the liquid may work as a lubricant. The holes of the end plate may further reduce the weight of the rotor as well as the amount of material used to produce the rotor.

In some embodiments of the first aspect of the invention, the cylinder of the rotor body has one open end and one closed end such that at least part of the cylinder is hollow.

By having an open end the rotor may be used in an outrunner motor such that the coils can be placed in the hollow space of the rotor.

In some embodiments of the first aspect of the invention, the rotor blades are protruding from the closed end of the cylinder of the rotor body.

The rotor blades are stably integrated when protruding from the closed end of the cylinder making the rotor sturdy and decreasing the risk of breaking. Furthermore, integrated rotor blades protruding from the closed end of a cylindrical body allows for a compact structure.

In some embodiments according to the first aspect of the invention, the rotor blades are configured for receiving liquid along the rotational axis and creating a liquid flow radially outwards from the rotational axis along the rotor blades.

Receiving liquid in the centre at the rotational axis and accelerating the liquid and creating a pressure difference from the inlet of the rotor to the outlet of the rotor or the rotor space increases the efficiency of the rotor.

In some embodiments according to the first aspect of the invention, the magnetic poles are distributed along the periphery of the cylinder of the rotor body.

In some embodiments according to the first aspect of the invention, the magnetic poles are radially magnetized with respect to the rotation axis of the rotor.

Arrangement of the magnetic poles at the periphery of the cylindrical rotor body allows for efficiently achieving rotational symmetry and appropriate magnetic field strength. When the cylinder of the rotor body is at least partly hollow and magnetic material of the sidewall of the cylinder is fully magnetized maximum contribution to the magnetic pole or magnetic dipole strength may be achieved from such a hollow cylinder.

In some embodiments according to the first aspect of the invention, the magnetic particles are ferrite particles, neodymium-iron-boron particles, samarium-cobalt particles, and/or aluminium-nickel-cobalt particles.

The magnetic particles of the composite material may all be of the same type, e.g. be any one or the materials listed above. In some variants, the composite material may comprise multiple types of magnetic particles being substantially evenly distributed throughout the matrix material, e.g. the composite material may comprise particles of two or more of the materials listed above. In some variants the relative amount of each type of particles may be the same, e.g. even fractions of weight. In other variants

beneficial effects may be achieved by choice of different particle sizes or differing amounts of the various particle materials.

In some preferred variants the magnetic particles have dimensions in the range of 0.5 μm to 5 μm, such as 1.25 μm to 3 μm. In some preferred variants all magnetic particles are of substantially the same size. For production the magnetic particles may be provided as a magnetic powder to be mixed into the matrix material while the matrix material is in a liquid state.

These magnetic materials and powders may be permanently magnetized and provide enhanced magnetic properties of the rotor. Magnetic particles and powders can be mixed with a matrix material to allow for casting of a rotor with a desired shape having a substantially even distribution of the magnetic particles throughout the magnetic material.

In some embodiments according to the first aspect of the invention, the matrix material comprises one of or a combination of polyphenylene sulfide, nylon 6/polyamide 6, nylon 12/polyamide 12, polybutylene terephthalate, polyethylene terephthalate, polycarbonate, and/or polyetheretherketone.

These matrix materials allow for a stable and strong rotor and substantially does not change size due to heat. Furthermore, the materials absorb almost no water such that the rotor can perform in a liquid pump without suffering from strain or cracking due to liquid absorption.

In preferred variants, the composite material comprises ferrite magnetic particles and PPS matrix material.

Ferrite and PPS have been tested and provide the necessary material properties and provides for a low cost of production.

In some embodiments according to the first aspect of the invention, the weight percentage of magnetic particles of the composite material is equal to or above 60% and the weight percentage of the matrix material is equal to or below 40%.

These percentages are suitable for a rotor with enough strength of the magnetic poles.

A second aspect of the present disclosure is a liquid pump for liquid cooling the liquid pump comprising a rotor according to the first aspect of the invention, a pump housing, and a set of coils. The pump housing comprises a shaft for controlling the movement range of the rotor relative to the pump housing. The pump housing comprises a liquid inlet and a liquid outlet.

A liquid pump with a rotor of the first aspect, a housing and a set of coils may provide for liquid pump that is compact and effective as well as simple and cost effective to produce. The shaft ensures a smooth rotation and stable position of the rotor relative to the housing. Having a compact liquid pump is preferable for use in a liquid cooling system for cooling electronic components. Thus, a liquid pump with these features is favourably used in a cooling system of a computer.

In some embodiments of the second aspect of the invention, the coils are placed along a plane, the plane being normal to the rotational axis and the plane intersecting the plurality of magnetic poles when the rotor is engaging the shaft.

By the described arrangement of the coils relative to the rotational axis and magnetic poles an inrunner motors or outrunner motor can be obtained.

In some embodiments of the second aspect of the invention, the coils are arranged closer to the rotational axis than the magnetic poles and thereby the liquid pump comprises an outrunner motor.

An outrunner motor may be preferrable for rotors and liquid pumps dimensionally suitable for liquid cooling systems for electronics such as computers as they may provide higher power than inrunner motors.

In some variants, the coils of the liquid pump comprises iron cores.

Coils having solid magnetic cores may provide a larger magnetic field than coils having air cores. Iron cores enhance the magnetic field created by the coils. Solid cores may cause vibrations to the rotor, the magnitude of such vibrations is however no larger than still allowing the efficient running of liquid pumps of computer cooling systems.

In some variants, the shaft is made of steel.

Steel provides a hard and stable shaft to ensure the position of the rotor inside the pump housing when the bearing is engaging the shaft.

In some variants, the liquid pump comprising a controller for controlling the currents of the coils.

The electromagnets of the liquid pump may be controlled by any standard known for controlling brushless motors. By having the controller, the liquid pump is able to rotate the rotor at a desired speed by inducing currents in the coils and creating a force on the rotor via the magnetic field created. The controller may affect the timing and/or magnitude of the applied electrical field and consequently of the induced magnetic field.

In some variants, the controller comprises a connector for connecting the controller to a computer.

The controller may be connected to a computer such that the liquid pump can be controlled trough the computer. The computer may even be the computer that is cooled by a liquid cooling system comprising the liquid pump. This provides for a liquid pump that can be attached and connected to the computer which it is supposed to cool while the pump may simultaneously be powered by that computer. Thus, the liquid pump is a module that may be added to any computer, especially if the connector is a standard type of connector.

In some embodiments of the second aspect of the invention, the liquid pump comprises a liquid inlet and a liquid outlet, wherein the liquid inlet and the liquid outlet are configured for connecting a tube or pipe thereto.

Having a liquid inlet and a liquid outlet both of which are configured for connecting a tube or pipe ensures that the liquid pump can be used with a radiator and a cold plate for a colling system of a computer.

In some variants, the liquid pump has a maximum flow rate below 500 litres/hour (l/h), 400 l/h or 300 l/h. The flow rates measured as average and usable flow rate when the liquid pump is positioned in a working position pumping liquid through a cooling loop.

In some variants, the liquid pump has a minimum flow rate above 100 l/h or 150 l/h.

In some variants, the flow rate is provided as the maximum flow rate without restrictions which is higher than the average flow rate of the pump when the pump is part of a closed liquid system. The maximum flow rate of the liquid pump without restrictions may be below 2000 l/h, 1500 l/h, or 1000 l/h.

In some variants, the maximum flow rate of the liquid pump without restrictions may be above 300 l/h, 500 l/h, or 800 l/h.

Thus, the liquid pump may be adapted to fit inside a computer casing, e.g. by being compact enough to fit inside a computer casing among electronic. The liquid pump is powerful enough to circulate liquid through a liquid cooling system.

A third aspect of the present disclosure is a liquid cooling system for cooling electronic components of a computer. The liquid cooling system comprising a liquid pump, a radiator, and a cold plate. The cold plate being configured to be placed in thermal contact with the electronic component of the computer. The liquid pump being in liquid connection with the radiator and the cold plate and forming a closed liquid loop with the cold plate and the radiator.

Having a liquid cooling system as described above the electronic components of the computer may be cooled efficiently and the pump system may be compact enough to fit inside the casing of a computer. The production and assembly of the liquid cooling system is made simpler and less expensive.

A fourth aspect of the present disclosure is a cooling system comprising a liquid cooling pump having a rotor and a radiator. The rotor of the cooling pump comprising a rotor body, a bearing, a plurality of rotor blades protruding from the rotor body, a plurality of magnetic poles being distributed with rotational symmetry about the rotational axis within the rotor body. The rotor body is formed by a cylinder, the cylinder having a first end and a second end. The bearing is for aligning the rotor with

a rotational axis, the bearing comprising a bearing cavity for receiving a shaft. The rotor body, the bearing, the rotor blades, and the magnetic poles are made of the same composite material, the composite material comprising magnetic particles substantially evenly distributed throughout a matrix material.

The fourth aspect provides a simple rotor of the liquid pump such that an effective liquid cooling system is obtained that the liquid cooling system being simple and cost effective to produce.

A fifth aspect of the present disclosure is a method for fabrication of a rotor for a liquid pump of a liquid cooling system. The method comprises injection moulding a rotor from a composite material, the composite material comprising magnetic particles and a matrix material. The method further comprises the step of magnetizing at least part of the rotor body to form a plurality of magnetic poles.

The obtained rotor may be according to any of the described embodiments.

Having a method as described above, a rotor which is compact and effective can be obtained. The production of the system is made simpler and less expensive. Moreover, the rotor can be used in a liquid cooling system for electronic components such as components of a computer.

In the following specific examples according to aspects of the present disclosure will be explained in more detail with reference to the accompanying drawings. The present disclosure may, however, be embodied in different forms than depicted below, and should not be construed as limited to any examples set forth herein. Rather, any examples are provided so that the disclosure will be thorough and complete, and will fully convey the scope of the invention to those skilled in the art. Like reference numerals refer to like elements throughout. Like elements will, thus, not be described in detail with respect to the description of each figure.

Summary of figures

Fig. 1-3 illustrate a rotor for a liquid pump.

Fig. 4 illustrates a liquid cooling system.

Fig. 5 illustrates a liquid pump for a liquid cooling system.

Fig. 6 illustrates parts of a liquid pump for a liquid cooling system.

Fig. 7-9 illustrate a rotor for a liquid pump.

Fig. 10 illustrates a liquid pump housing and a rotor for a liquid pump.

Fig. 11 illustrates a rotor and a stator for a liquid pump.

Detailed description of the invention

A rotor 10 for a liquid cooling pump is illustrated in Fig. 1, Fig. 2, and Fig. 3. The rotor 10 comprises a rotor body 12, rotor blades 14, a bearing 18, and magnetic poles 16.

The rotor body 12 is formed at least partly as a cylinder, additional parts may have shapes different from a cylinder, i.e. the rotor body 12 may comprise a cylinder having protrusions, holes, indents and/or cavities. The cylinder may have an open end as illustrated in Fig. 7. An open end of a cylinder refers to one of the two circular bases of the cylinder that is not completely enclosed or covered. For a hollow cylinder, the open end allows access to its interior. A closed end of a cylinder refers to one of the two circular bases of the cylinder that is enclosed or covered. A closed end may be an end that supports a bearing in the center of the cylinder thus a closed end may be an end having spokes and may therefore not be completely covered. The cylinder of the rotor body may comprise an open end and a closed end as in Fig. 7. A section of the cylinder may thus be hollow whereby the space of the hollow region may be utilized by other components e.g. allowing the rotor to fit with other components of an assembly or for protrusion of the body into the hollow region. The closed end may comprise through-going holes such that the closed end is not completely closed while still comprising a structure mechanically connecting the sidewalls of the cylindrical body across the diameter of the body. The closing of the closed end may be by an integrated plate and the plate may comprise one or more through-going holes such that the accumulated open area of the closed end is smaller at the closed end than at the open end. An embodiment having such a closed end is illustrated in Figs. 7-9. By the accumulated open area is understood the area within the circumference of the rotor body through which fluid flow may occur.

The rotor body 12 is made of a composite material comprising magnetic particles.

The rotor 10 comprises a bearing 18 for aligning the rotor 10 with a rotational axis 22. The rotational axis 22 is defined by the centre of the bearing 18. Typically the rotational axis will further align with the centre of a shaft 20 that is inserted into the bearing 18. Thereby the rotor 10 may rotate around the centre point of a shaft 20. The

shaft 20 may be a separate component. The shaft 20 may be a component being an integral part of a pump housing 26 (see Fig. 5) which the rotor 12 is to be mounted with during operation.

The bearing 18 may be a simple glide bearing 18 such as a sleeve bearing 18, a journal bearing 18 or bushing. Other suitable bearings may also be used. The bearing 18 is made of the same composite material as the rotor body 12. The bearing 18 comprises an inner bearing surface for facing a shaft 20. The inner bearing surface may be a smooth surface. In some variants the inner bearing surface may have a cylindrical shape. In some variants the inner bearing shape may be conical.

The bearing 18 is formed by a cavity of the rotor body 12. The cavity may be a through-going hole of the rotor body 12 as illustrated in Figs. 1-3. In other variants the cavity may be a recess of the rotor body 12. The cavity may be formed as part of the closed end of a cylindrical rotor body 12 as illustrated in Figs. 7 and 8. The bearing 18 may protrude from the closed end of the cylindrical rotor body 12 either towards the other end of the cylinder or away from the other end of the cylinder. The cavity of the bearing 18 is configured such that it may receive a shaft 20 of a pump housing 26 when the rotor 10 is part of a liquid cooling system and the rotor 10 is able to rotate around the shaft 20 with minimal friction. The rotor 10 may be for a liquid cooling pump and be immersed in liquid when in use. The liquid will then function as lubricant between the surfaces of the bearing 18 and the shaft 20 for minimizing the friction of the bearing 18.

The cavity of the bearing 18 is substantially circular and the diameter of the cavity must be chosen as a trade-off between mechanical strength and rotational speed as the speed of a point on the inner bearing surface increases with the diameter of the bearing 18 when rotating. A higher speed provides a higher friction between the surface of the shaft 20 and the inner bearing surface. The motor needs to counteract the friction forces to rotate the rotor 10 and thus the friction should be minimized. For this reason preferrable dimensions of the bearing 18 may such that it is suitable for receiving a shaft 20 with a diameter below 1 cm, such as below 7 mm, 6 mm, 5 mm, 4 mm, 3 mm, 2 mm, or 1 mm. The shaft 20 should be thick enough to provide the necessary mechanical strength to avoid damage of the shaft 20 due to the forces of rotation during operation of the pump hence in some preferred variants the diameter of the shaft is larger than 0,5 mm, such as larger than 1 mm, 1,5 mm, or 2 mm.

An outer bearing 18 could also be used for embodiments of the rotor wherein the outside of the rotor 10 fits into a cavity of a housing. Embodiment with an outer bearing will normally provide a larger diameter of the inner bearing surface and thus more friction and lead to a less efficient pump. Therefore, inner bearings are preferred for the rotor 10 of the present invention.

The rotor 10 comprises a plurality of rotor blades 14. The rotor blades 14 protruding from the rotor body 12. The rotor blades 14 may protrude from one end of the cylinder of the rotor body 12. The rotor blades 14 may protrude from the side of the cylinder of the rotor body 12. The rotor blades 14 may protrude further radially than the cylinder of the rotor body 12. The rotor blades 14 may extend from an end of the cylinder in a manner such that the blades do not extend further radially than the cylinder of the rotor body 12 as the rotor 10 illustrated in Figs. 7-9. The rotor blades 14 may protrude from the closed end of the cylinder as illustrated in Figs. 7-9. The rotor blades 14 may have any suitable shape such as being straight (see Figs. 1-3) or curved (see Fig. 7-9).

The rotor blades 14 are made of the same composite material as the rotor body 12 and the bearing 18.

The rotor blades 14 may be arranged as in a centrifugal pump where liquid may be received from a centred channel or conduit with an outlet placed on the rotational axis 22. The liquid may flow from this centred channel on the rotational axis 22 (see the top of Fig. 2) along the rotational axis 22 and change direction to form a flow in the radial direction following the rotor blades 14 radially outwards. The liquid may be collected into a single outlet channel of the pump such that the pressure from the liquid is forcing the liquid out of the outlet channel. Hereby the pump may pump liquid trough a liquid cooling system to circulate cooling liquid. The higher a pressure a pump can provide, the higher a liquid flow can be obtained which results in a more efficient liquid pump 38.

The rotor 10 comprises a plurality of magnetic poles 16. The magnetic poles 16 are arranged in the cylinder of the rotor body 12. As the rotor body 12 is made of a composite material including magnetic particles the composite material may be magnetized to form magnetic poles 16. Magnetizing the rotor body 12 is done by aligning most of the magnetic particles such that the poles of the magnetic particles are oriented substantially in the same direction. An example of how the magnetic

south (S) and north (N) poles can be arranged is illustrated in Fig. 3. In some preferred variants, magnetization of the magnetic particles of the composite material is performed locally such that the poles are spatially separated by unmagnetized composite material.

The rotor 10 is fabricated by moulding, preferably injection moulding such that the rotor 10 is produced in a single piece. Therefore, the rotor body 12, the bearing 18, the rotor blades 14, and the magnetic poles 16 are of the same composite material. The composite material comprises magnetic particles. The magnetic particles may be distributed substantially evenly throughout the composite material. Alternatively the magnetic particles are concentrated in regions of the rotor body 12 such as the positions of the magnetic poles 16. The magnetic particles may be magnetic powder such as barium ferrite powder, strontium ferrite powder, neodymium-iron-boron powder, samarium-cobalt powder, or aluminium-nickel-cobalt powder. The composite material further comprises a matrix material for binding the magnetic particles together such that the rotor 10 can be formed as a single piece. The matrix material is the continuous phase of the composite material that binds the magnetic particles together. The matrix material may be any suitable matrix material such as any suitable thermosetting polymer or thermoplastic polymer. Such polymers may be polyphenylene sulfide (PPS), nylon 6/polyamide 6, nylon 12/polyamide 12, polybutylene terephthalate, polyethylene terephthalate, polycarbonate, polyetheretherketone, and/or a similar polymer. The weight percentage of the magnetic powder/particles may be above 70% and the weight percentage of the matrix material may be below 30%. A specific weight percentage (wt%) may be 85 wt% magnetic powder and 15 % matrix material. The weight percentage may be 75-90 wt% magnetic powder and 10-25 wt% matrix material. The weight percentage may be 80-90 wt% magnetic powder and 10-20 wt% matrix material. Preferably strontium ferrite and PPS is used. In a preferred embodiment the composite material is approximately 85 wt% strontium ferrite and approximately 15 wt% PPS.

The magnetic poles 16 may be formed after the rotor has been moulded. That means the magnetic poles may be formed after the moulding process by locally magnetizing regions of the cast rotor body. In other variants the rotor may be magnetized during the moulding process by magnetizing the rotor body 12 during the process of solidifying the composite material. In the magnetization process multiple magnetic poles 16 can be created such that they will be permanent after the moulding process is

completed and the composite material is hardened. These two methods may provide a rotor comprising magnetic poles such that the rotor can be driven to provide a flow of liquid.

The magnetic poles 16 may point in the radial direction, such as to have the same effect as multiple magnets placed along the edge of the cylinder of the rotor body 12 or integrated in the rotor body 12

The magnetic poles 16 may be arranged diametrically. The magnetic poles 16 may thus have the effect of a radially magnetized ring magnet or a diametrically magnetized ring magnet.

The magnetic poles 16 may be arranged in the composite material of the sidewall of a hollow part of the cylinder of the rotor body 12 as illustrated in Figs. 7-9, corresponding to an outrunner motor. In other variants the magnetic poles 16 may be arranged on the outside of the cylinder of the rotor body 12 relative to the rotational axis 22 corresponding to an inrunner motor. In these configurations the rotor 10 may be used in inrunner motors and in outrunner motors.

The rotor 10 may be driven by a motor e.g. when used in a liquid cooling system. A preferrable motor for driving the rotor 10 comprises coils for working as electromagnets as in any brushless induction motor. The coils 24 are illustrated in Fig. 3 and Fig. 11. The coils 24 may comprise iron cores 25 to enhance the strength of the created magnetic fields and thereby increasing the power of the motor.

The coils 24 are aligned with the magnetic poles 16 of the rotor 10 such that a driving force of the rotor 10 can be created. The coils may be placed in the same plane as the magnetic poles 16 along the rotational axis 22 when the plane is normal to the rotational axis 22. The coils 24 may be placed relative to the magnetic poles 16 radially closer to the rotational axis 22 or further away from the rotational axis 22. In Fig. 3 the coils 24 are arranged further away from the rotational axis 22 than the magnetic poles 16 while in Fig. 11 the coils 24 are arranged closer to the rotational axis 22 than the magnetic poles 16.

In some embodiments the magnetic poles may be arranged in structures protruding from the sidewalls of the rotor body into a hollow region of the cylinder, e.g. as bars or

wings protruding from the inside wall or the solid end of the cylinder. The magnetic poles 16 may start at the open end of the cylinder and extend towards the closed end. The extension may be all the way to the closed end. In some variants the extension may extend part of the way from the open end to the closed end such as half the way. Thereby, the magnetization is mainly performed on the first half of the hollow cylinder if for example the coils that the magnetic poles are supposed to align with are aligned adjacent to the first half of the hollow cylinder.

In some embodiments the number of magnetic poles 16 differs from the number of coils 24. In some preferred variants there are more coils 24 than magnetic poles 16 such as twice as many coils 24 as magnetic poles 16. For preferred configurations the magnetic poles 16 may be evenly distributed as a multipole ring magnet and the coils 24 are arranged with rotational symmetry and dimensioned in a manner such that every second coil 24 may be aligned with a magnetic pole 16. Such an arrangement may ensure that all positions ensure a rejection force for driving the rotor 10 relative to the stator. In an embodiment the number of coils 24 is not equal to the number of magnetic poles 16 of the rotor 10. In other variants the number of coils 24 is preferably larger than the number of magnetic poles 16.

In alternative embodiments, the coils 24 may be positioned with the same distance to the rotational axis 22 as the magnetic poles 16 and displaced in the direction along the rotational axis 22 such that the coils 24 and the magnetic poles 16 are adjacent to each other but without touching each other.

The coils 24 may be positioned outside a pump housing 26 and the rotor 10 may be positioned inside the pump housing 26 as illustrated in Fig. 5. The pump housing 26 may have any number of conduit guiding the flow of liquid from the liquid inlet 34 of the pump housing 26 to the liquid outlet 36 of the pump housing 26 along a predetermined flow path. In some variants the conduits may be formed by one or more partition layers arranged within the chamber formed by the pump housing 26.

Seals such as O-rings or rubber layers may also be used in the liquid pump 38. The liquid pump 38 may be connected to a cold plate 28 for cooling electronic components via the cold plate 28. Heat from the cold plate 28 may be transferred to a cooling liquid that may be circulated by the liquid pump 38 and cooled in another place such as a radiator 30 (see Fig. 4).

The rotor 10 may be part of a liquid pump 38 as illustrated in Fig. 5. The liquid pump 38 comprises a rotor 10 as described above, a pump housing 26, coils 24, a liquid inlet 34 and a liquid outlet 36.

The pump housing 26 should be liquid tight and form one or more conduits for guiding the liquid flow from a liquid inlet 34 of the housing to a liquid outlet 36 of the housing. The housing may provide a wall between the rotor 10 and the coils 24 of the pump 38. The wall can ensure that the rotor 10 is in the liquid flow path of the liquid pump housing 26 and that the coils 24 are not in contact with liquid. The housing may be connected/fastened to a cold plate 28 which would provide a compact solution for cooling electronic components of computers. The motor of the liquid pump 38 illustrated in Fig. 5 is an outrunner motor. Other embodiments within the scope of the invention may be configured to function with an inrunner motor.

The coils may be connected to a controller for controlling currents running through the coils for controlling the movement of the rotor 10. The coils may comprise metal cores 25, such as iron cores 25 or ferrite cores 25 to enhance the magnetic field generated by the coils 24. The controller may be configured to connect to a motherboard of a computer.

The liquid pump 38 is illustrated in Fig. 6 without the outer shell of the housing to allow a view of the position of the rotor 10 relative to the stator of the liquid pump 38. The liquid pump 38 may comprise different partition layers for guiding liquid through the housing these are partially visible in the view of Fig. 6. The pump housing 26 may comprise a retention ring with a fastening mechanism such as a hole allowing the liquid pump 38 to be fastened to a board. A cold plate 28 may be fastened to the liquid pump 38 and the liquid pump 38 may be fastened to a motherboard such that the cold plate 28 is in thermal contact with an electronic component of the motherboard.

Part of the pump housing 26 of the liquid pump 38 is illustrated in Fig. 10 including the outer walls while excluding the partition layers. The rotor 10 is also visible being mounted inside the chamber of the pump housing 26. The rotor 10 is arranged with the shaft 20 of the liquid pump 38 engaging the bearing 18 of the rotor 10. The rotor blades 14 may when the rotor 10 is rotating force liquid towards the outside of the rotor 10 and start a circulating flow at the edge of the rotor 10 where the housing may

create a channel for this flow. The flow may then be guided into a conduit (not shown) leading to the liquid outlet 36 of the liquid pump 38.

A complete cooling system is illustrated in Fig. 4. The cooling system comprises a liquid pump 38, a radiator 30, tubes or pipes connecting the liquid pump 38 to the radiator 30, and a cold plate 28. The cold plate 28 may be placed in the liquid flow path along the pipes/tubes or the cold plate 28 may be connected to the liquid pump 38 as illustrated in Fig. 5. The liquid pump 38 is a pump as described above. The liquid pump 38 and cold plate 28 as illustrated in Fig. 5 may be fastened directly to a circuit board such as a motherboard such that the cold plate 28 is in thermal contact with one or more electronic components of the circuit board.

The cooling system may cool one or more electronic components. Heat from the electronic component is transferred to the cold plate 28 and further to a cooling liquid that is disposed within the closed loop of the cooling system. The cooling liquid is driven by the liquid pump 38 through the cold plate 28, the pipe/tubes and into a radiator 30. The radiator 30 has multiple channels where the heat is transferred to fins between the channels and from the fins to the surrounding air. The air may be exchanged by one or more fans to provide new cold air. In this way the cooling system can cool electronic components in an efficient manner and the electronic components may be allowed to run with setting produce a lot of heat as the heat is transferred away from the component and thus electronic components does not overheat.

Fig. 11 illustrates a rotor 10, a stator, a liquid inlet 34, and a liquid outlet 36 of a liquid pump 38. The coils of the stator is placed such that a force can be exerted to the rotor 10 in order to rotate the rotor 10 around the rotational axis 22. Minimising the space between the rotor 10 and the stator provides the highest signal strength, meanwhile the spacing must be sufficient to allow a wall of the pump housing 26 to separate the rotor 10 and the stator such that the rotor 10 can be inside the chamber of the housing where liquid is supposed to flow and the stator can be outside the chamber of the housing such that the stator may be separated from the liquid. Having the stator and the coils 24 arranged outside the liquid, e.g. surrounded by air, provides less strict requirements for the stator and the stator may easily be connected to a controller and electrical power.

Below is a list of reference signs used in the detailed description of the present disclosure and in the drawings referred to in the detailed description of the present disclosure.

10 Rotor
12 Rotor body
14 Rotor blades
16 Magnetic pole
18 Bearing
20 Shaft
22 Rotational axis
24 Coil
25 Iron core
26 Pump housing
28 Cold plate
30 Radiator
32 Tube/pipe
34 Liquid inlet
36 Liquid outlet
38 Liquid pump

CLAIMS

1. A rotor (10) for a liquid pump, said rotor comprising:

- a rotor body (12) formed by a cylinder, said cylinder having a first end and a second end;
- a bearing (18) for aligning said rotor (10) with a rotational axis (22), said bearing comprising a bearing cavity for receiving a shaft (20);
- a plurality of rotor blades (14) protruding from said rotor body (12);
- a plurality of magnetic poles being (16) distributed within said rotor body (12) with rotational symmetry about said rotational axis (22),

characterized in that

said rotor body (12), said bearing (18), said rotor blades (14), and said magnetic poles (16) are made of the same composite material, said composite material comprising magnetic particles substantially evenly distributed throughout a matrix material.

2. A rotor according to claim 1, wherein said cylinder of said rotor body (12) has one open end and one closed end such that at least part of said cylinder is hollow.

3. A rotor according to any of the preceding claims, wherein said rotor blades (14) are protruding from said closed end of said cylinder of said rotor body (12).

4. A rotor according to any of the preceding claims, wherein said rotor blades (14) are configured for receiving liquid along said rotational axis (22) and creating a liquid flow radially outwards from said rotational axis along said rotor blades (14).

5. A rotor according to any of the preceding claims, wherein said magnetic poles are distributed along the periphery of said cylinder of said rotor body (12).

6. A rotor according to any of the preceding claims, wherein said magnetic poles are radially magnetized with respect to said rotation axis (22) of said rotor (10).

7. A rotor according to any of the preceding claims, wherein said magnetic particles are one or a combination of ferrite particles, neodymium-iron-boron particles, samarium-cobalt particles, or aluminium-nickel-cobalt particles.

8. A rotor according to any of the preceding claims, wherein said matrix material comprise one or a combination of polyphenylene sulfide, nylon 6/polyamide 6, nylon 12/polyamide 12, polybutylene terephthalate, polyethylene terephthalate, polycarbonate, polyetheretherketone.

9. A rotor according to any of the preceding claims, wherein the weight percentage of magnetic particles of said composite material is above 60% and the weight percentage of said matrix material is below 40%.

10. A liquid pump (38) for liquid cooling comprising:

- a rotor (10) according to any of claims 1-9;
- a pump housing (26), said pump housing (26) comprises a shaft (20) for controlling the movement range of said rotor (10) relative to said pump housing (26), said pump housing (26) comprising a liquid inlet (34) and a liquid outlet (36),
- a set of coils (24).

11. A liquid pump according to claim 10, wherein said coils (24) are placed along a plane, said plane being normal to said rotational axis (22) and said plane intersecting said plurality of magnetic poles when said rotor (10) is engaging said shaft (20).

12. A liquid pump according to any of claims 10-11, wherein said coils (24) are arranged closer to said rotational axis (22) than said magnetic poles and thereby said liquid pump (38) comprises an outrunner motor.

13. A liquid pump according to any of claims 10-12, wherein said liquid pump (36) comprises an liquid inlet (34) and an outlet (36), wherein said inlet (34) and said outlet (36) are configured for connecting a tube (32) or pipe (32) thereto.

14. A liquid cooling system for cooling electronic components of a computer, said liquid cooling system comprising:

- a liquid pump (38) according to any of claims 10-13,
- a radiator (30),
- a cold plate (28), said cold plate (28) configured to be placed in thermal contact with said electronic component of said computer,

wherein said liquid pump (38) is in liquid connection with said radiator and said cold plate and form a closed liquid loop.

15. A method for fabrication of a rotor (10) for a liquid pump of a liquid cooling system, said method comprising:

- injection moulding a rotor (10) according to any of the claims 1-9 from a composite material comprising magnetic particles and a matrix material,
- magnetizing at least part of said rotor body (12) to form a plurality of magnetic poles.

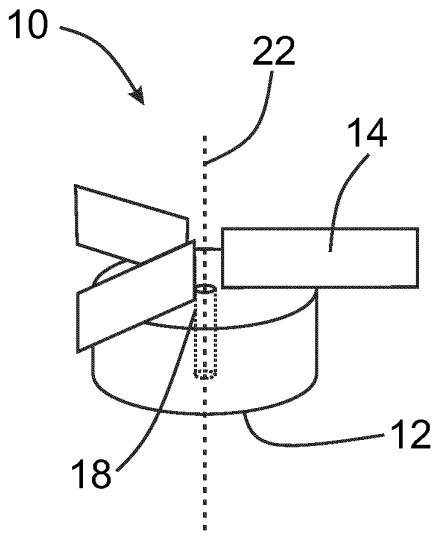

Fig. 1

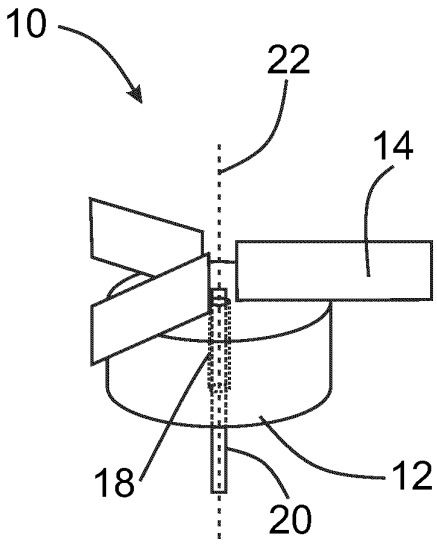

Fig. 2

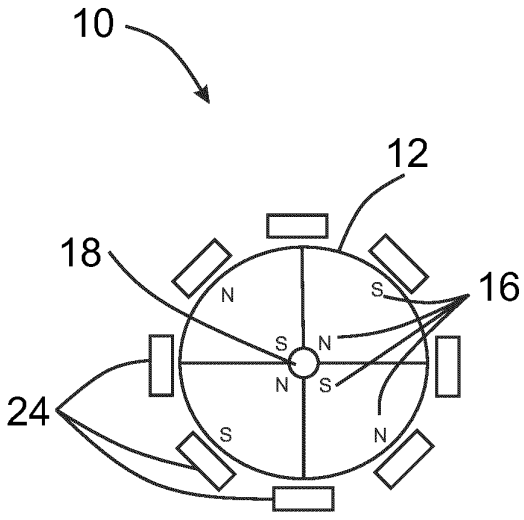

Fig. 3

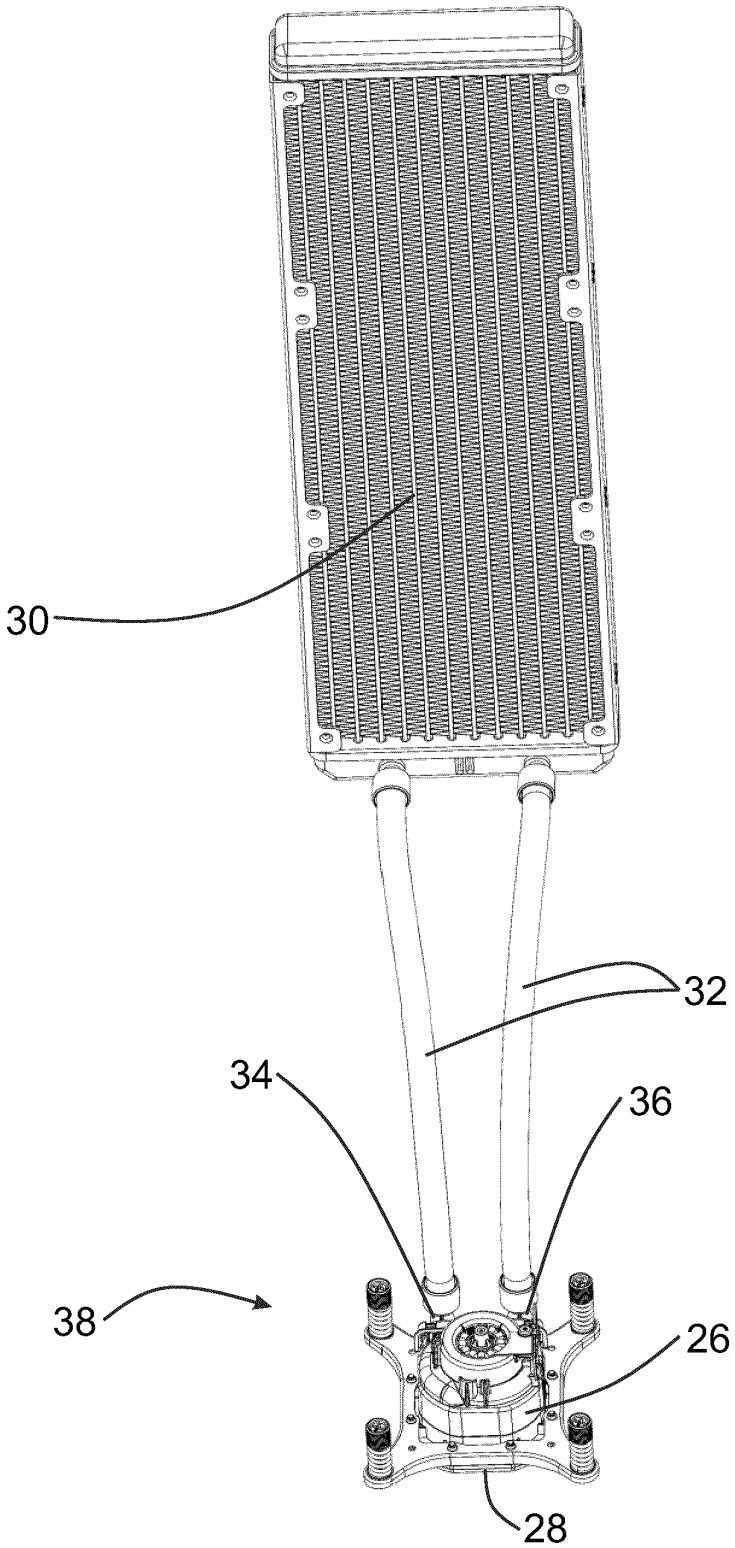

Fig. 4

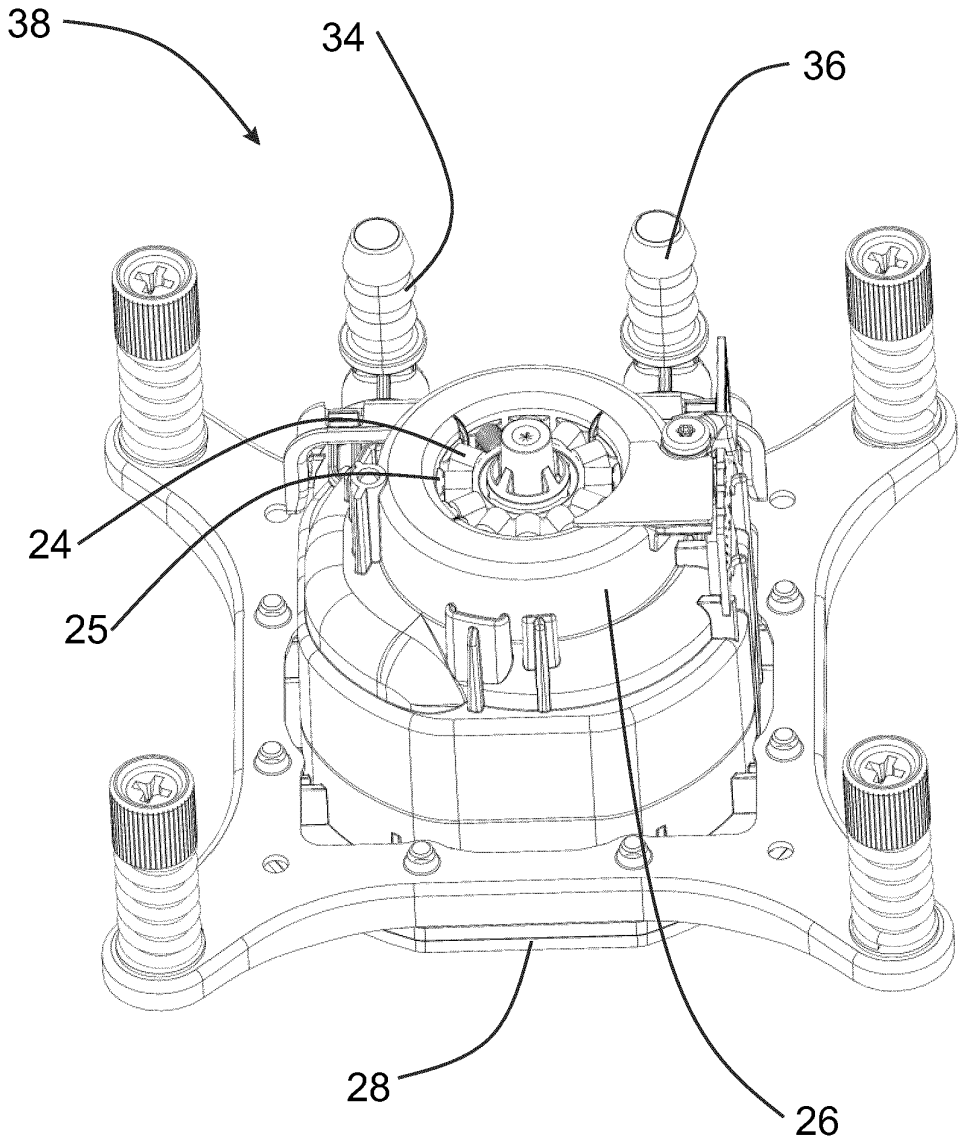

Fig. 5

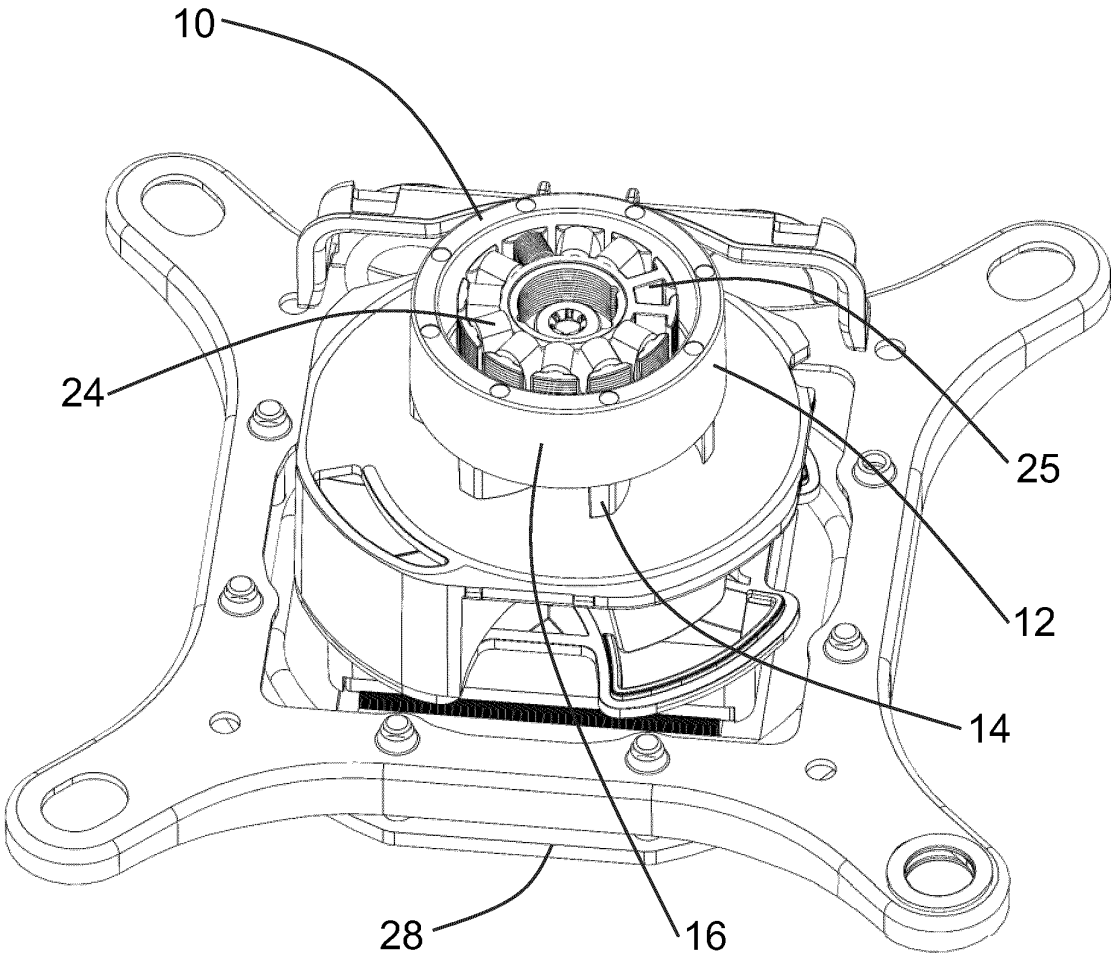

Fig. 6

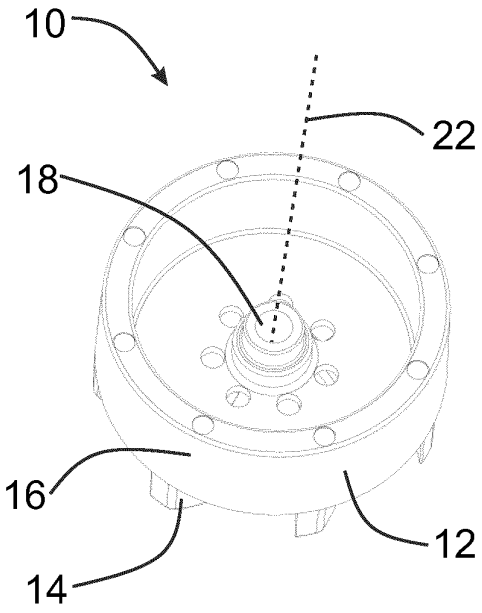

Fig. 7

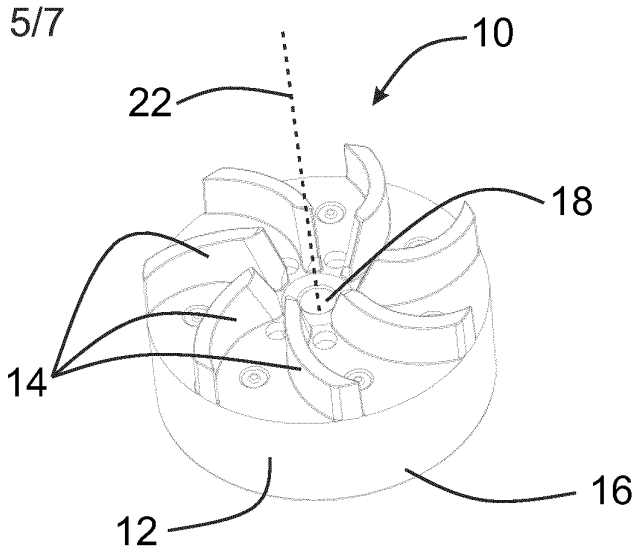

Fig. 8

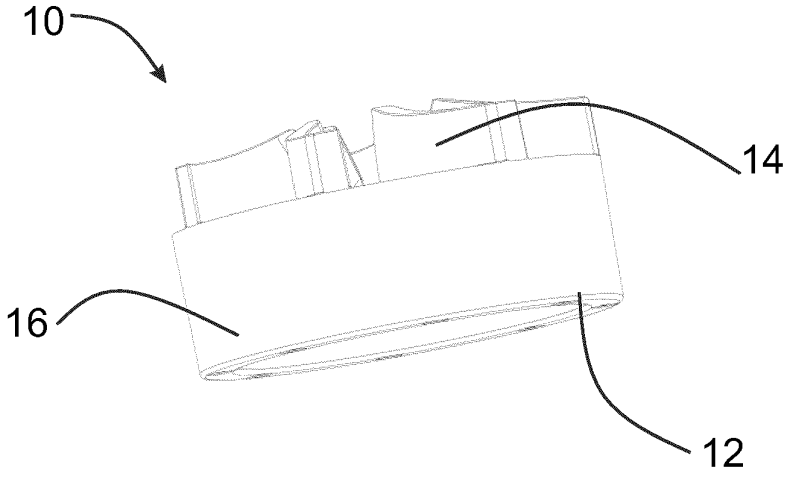

Fig. 9

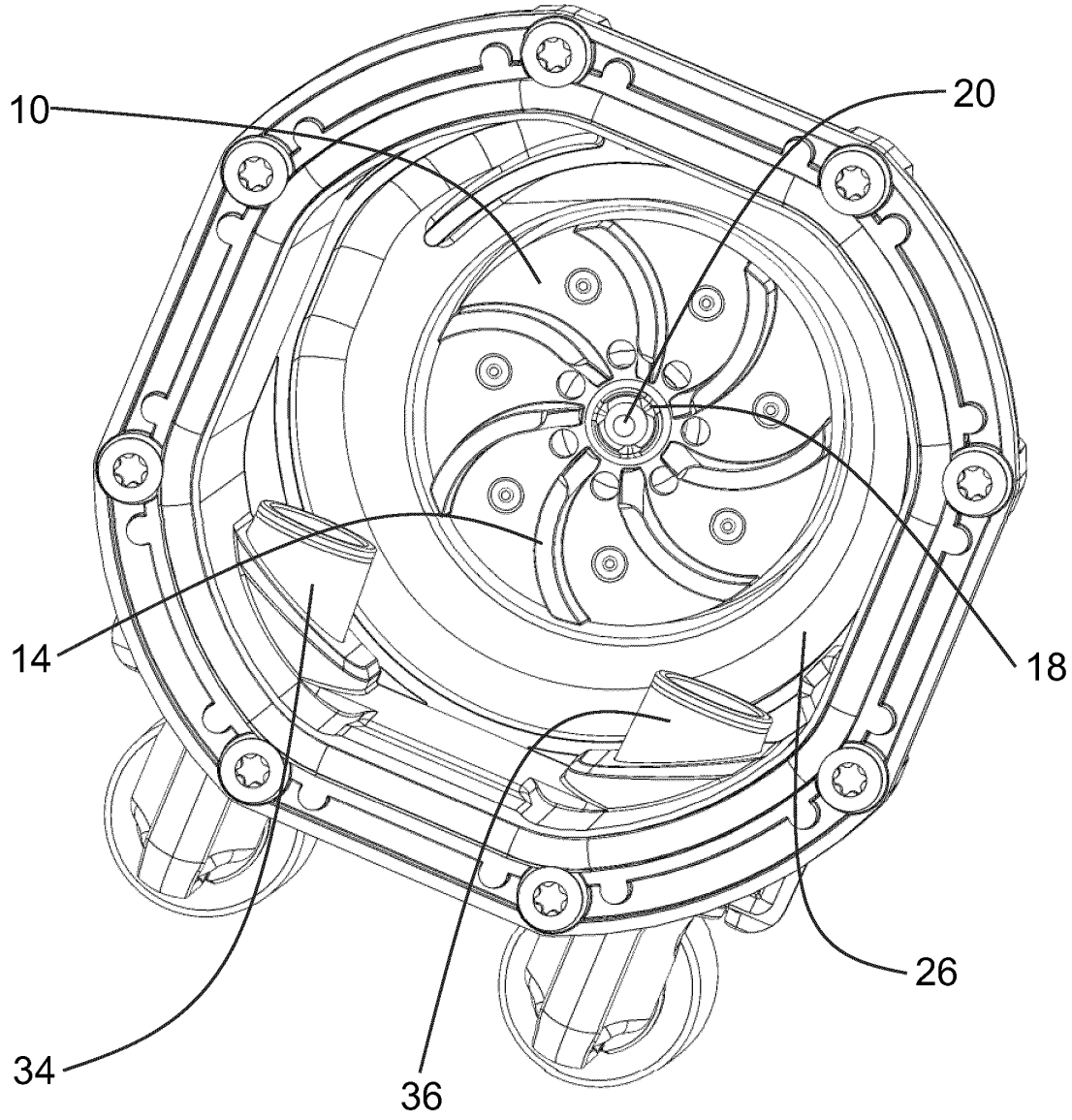

Fig. 10

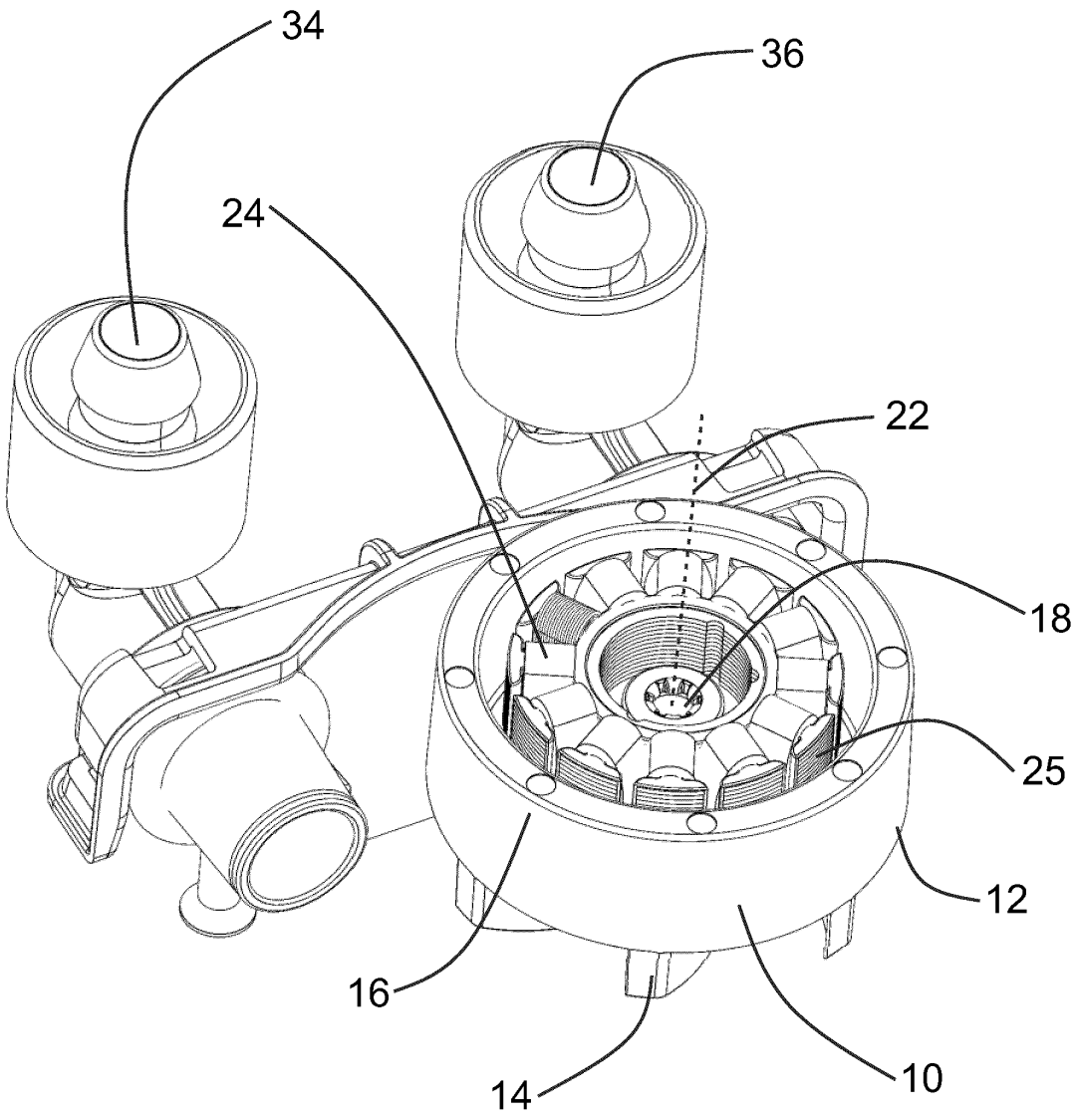

Fig. 11

INTERNATIONAL SEARCH REPORT

International application No
PCT/EP2026/050115

A. CLASSIFICATION OF SUBJECT MATTER

INV. F04D29/02 F04D29/22 F04D13/06
ADD.

According to International Patent Classification (IPC) or to both national classification and IPC

B. FIELDS SEARCHED

Minimum documentation searched (classification system followed by classification symbols)
F04D

Documentation searched other than minimum documentation to the extent that such documents are included in the fields searched

Electronic data base consulted during the international search (name of data base and, where practicable, search terms used)

EPO-Internal

C. DOCUMENTS CONSIDERED TO BE RELEVANT

Category*	Citation of document, with indication, where appropriate, of the relevant passages	Relevant to claim No.
X Y	US 6 663 362 B1 (LENTZ GERD [DE] ET AL) 16 December 2003 (2003-12-16) column 2, line 54 - column 3, line 14; figure 1 -----	1-6, 10-13,15 7-9,14
Y	EP 3 926 791 A (BARUFFALDI SPA) 22 December 2021 (2021-12-22) paragraphs [0019] - [0022] -----	7-9
Y	US 2008/075586 A1 (FUKUKI HARUMI [JP] ET AL) 27 March 2008 (2008-03-27) paragraph [0033]; figure 2 -----	14

☐ Further documents are listed in the continuation of Box C.

☒ See patent family annex.

* Special categories of cited documents :

"A" document defining the general state of the art which is not considered to be of particular relevance

"E" earlier application or patent but published on or after the international filing date

"L" document which may throw doubts on priority claim(s) or which is cited to establish the publication date of another citation or other special reason (as specified)

"O" document referring to an oral disclosure, use, exhibition or other means

"P" document published prior to the international filing date but later than the priority date claimed

"T" later document published after the international filing date or priority date and not in conflict with the application but cited to understand the principle or theory underlying the invention

"X" document of particular relevance;; the claimed invention cannot be considered novel or cannot be considered to involve an inventive step when the document is taken alone

"Y" document of particular relevance;; the claimed invention cannot be considered to involve an inventive step when the document is combined with one or more other such documents, such combination being obvious to a person skilled in the art

"&" document member of the same patent family

Date of the actual completion of the international search	Date of mailing of the international search report
22 March 2026	31/03/2026

Name and mailing address of the ISA/	Authorized officer
European Patent Office, P.B. 5818 Patentlaan 2 NL - 2280 HV Rijswijk Tel. (+31-70) 340-2040, Fax: (+31-70) 340-3016	Brouillet, Bernard

1

INTERNATIONAL SEARCH REPORT

Information on patent family members

International application No
PCT/EP2026/050115

Patent document cited in search report	Publication date	Patent family member(s)	Publication date
US 6663362 B1	16-12-2003	BR 0007661 A	06-11-2001
		CN 1338032 A	27-02-2002
		DE 19956380 C1	04-01-2001
		EP 1149245 A1	31-10-2001
		ES 2272356 T3	01-05-2007
		JP 4860867 B2	25-01-2012
		JP 2003515059 A	22-04-2003
		KR 20010101636 A	14-11-2001
		US 6663362 B1	16-12-2003
		WO 0138741 A1	31-05-2001
EP 3926791 A	22-12-2021	NONE	
US 2008075586 A1	27-03-2008	CN 101149054 A	26-03-2008
		CN 201106564 Y	27-08-2008
		JP 4293217 B2	08-07-2009
		JP 2008075608 A	03-04-2008
		TW 200825294 A	16-06-2008
		US 2008075586 A1	27-03-2008